LLNL-PRES-495983

Lawrence Livermore National Laboratory

COG11 – Available Now to Criticality Safety Practitioners

Presented at the International Conference on Nuclear Criticality Safety at Edinburgh, Scotland, United Kingdom, 19 September 2011

Rich Buck[1], Dermott Cullen[1], Dave Heinrichs[1], Allan Krass[2], Chuck Lee[1], Mark Lee[3] and Ed Lent[1]

[1]Lawrence Livermore National Laboratory, P.O. Box 808, L-198, Livermore, CA 94551
[2]CS Engineering, Inc., 702 Foxfield Lane, Knoxville, TN 37922
[3]US Department of Energy, National Nuclear Security Administration, P.O. Box XXX, L-XXX, Livermore, CA 94551

This work performed under the auspices of the U.S. Department of Energy by Lawrence Livermore National Laboratory under Contract DE-AC52-07NA27344

History

L Division

- Development started in **1980s**
- Radiation detection and signal processing for **UGT**
- General purpose first principles Monte Carlo particle transport
- Deep penetration (shielding) problems
- Criticality

NCS Division

- Responsible for development since the late **1990s**
- Focus on safety software for criticality safety applications
- COG10 – first public release in **2007**

Latest version

COG11 = Modern, General Purpose, High-Fidelity, Multi-Particle, Monte Carlo transport code (second public version)

- LLNL approved **safety software** for criticality safety applications
- LLNL approved limited distribution as **export controlled** software
- "COG11 Manual Supplement", LLNL-SM-461824

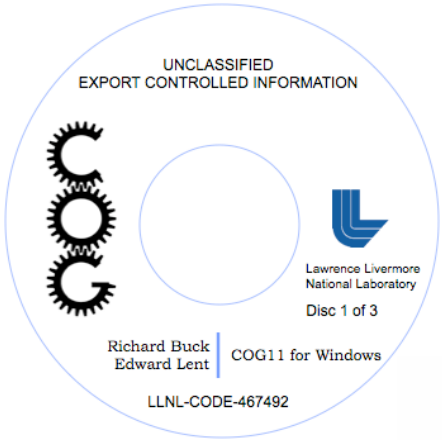

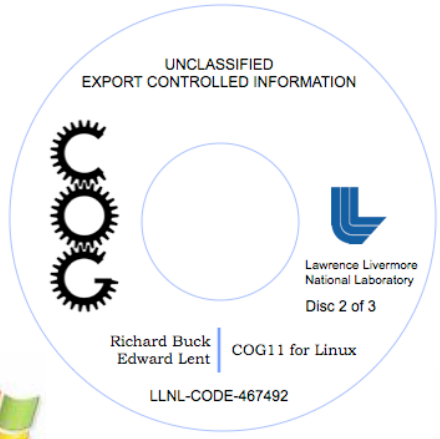

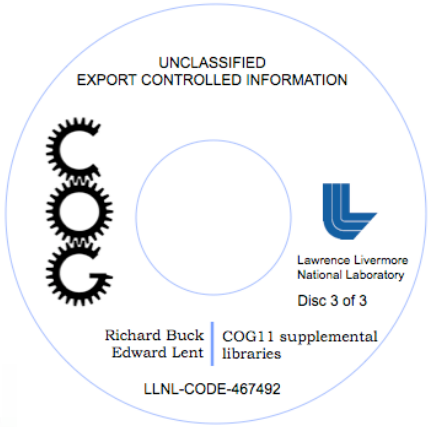

Who's who

Physicists

- Tom Wilcox (inactive)
- Ed Lent
- Rich Buck

Computer Scientists

- Stella Hadjimarkos (inactive)
- Susan Post (inactive)
- Chuck Lee

What's new?

- **Geometry enhancements**

  – **LATTICE** geometry feature allows the user to easily specify a regular array of identical units of arbitrarily complex structure (example)

  – **NOT** (exclusion) operator may be used to describe a sector as a volume that excludes other specified volumes and may be defined explicitly – in terms of its bounding surfaces – or implicitly – in terms of other previously-defined sectors

- **Enhanced visualization**

  – "COG11 **–xi** inputfile" enables interactive X-Window graphics (example)

- **Enhanced parallel processing for Windows**

  – **MPICH2**

LATTICE example[1]

[1]Provided by Dr. Philip Chou, LLNL

```
GEOMETRY
  use lattice 2 lat3x3x2 -11 tru 0 0 11.15 $ Array
  sector 5 PE 11 -12                       $ Reflector

  define unit 1
    sector 1 oxide  -1
    sector 3 steel  -3 1 2

  define lattice 2
    use unit 1 Can -10 tru 0 0 0 pitch 18.16 18.16 22.3

SURFACES
  1 cylinder z 7.65 -10.88   8.88 $ oxide
  2 cylinder z 7.65   8.88  10.88 $ air inside can
  3 cylinder z 7.68 -10.91  10.91 $ outer can surface
 10 box  18.16  18.16  22.30 $ Unit cell
 11 box  54.48  54.48  44.60 $ Inner reflector surface
 12 box  84.96  84.96  75.08 $ Outer reflector surface
```

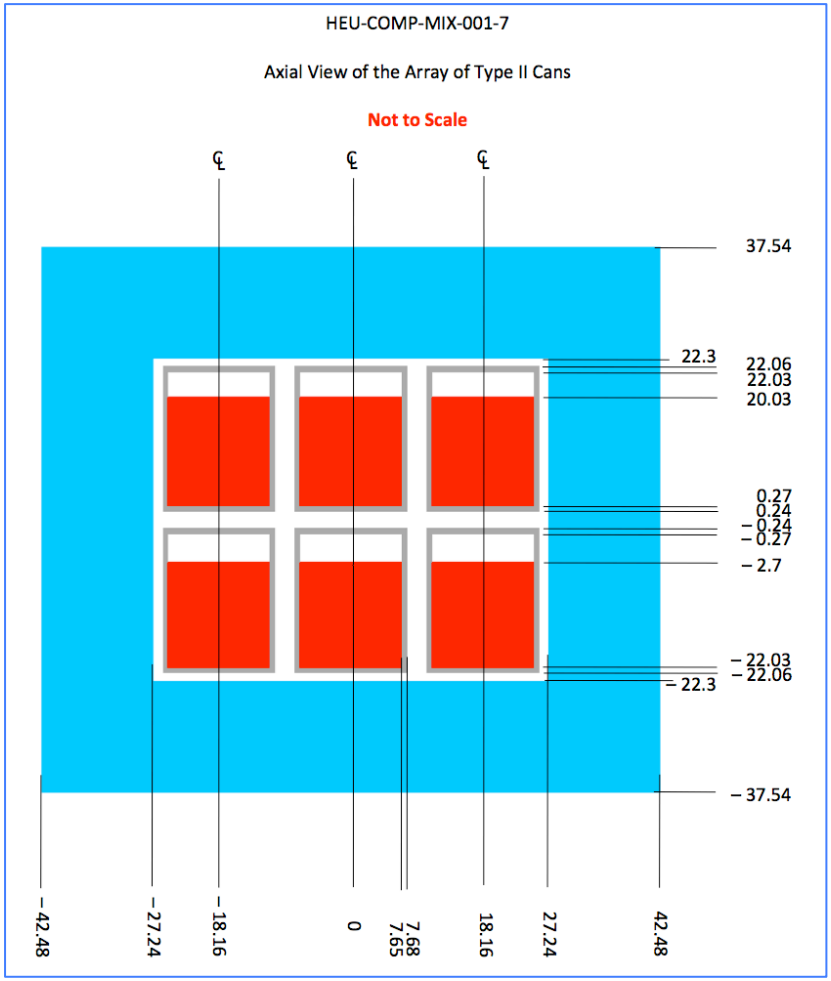

-xi example[2]

[2]Provided by Mrs. Catherine Percher, LLNL

```
aztec4{dave}30: COG11 -xi inputfile

~~~~~~~~~~~COG Interactive Graphics~~~~~~~~~~~~~

>>Type in picture command, or helpcs or helppp
>>        q to quit
helppp
>> For Perspective Pictures, command line is of form:
pic p  | sec |   [color] [noframe] [res   resmin resmax] Xc Yc Zc
       | mat |
       | reg |
   R d theta phi  s1 s2 ..
   [title = ...]

Lines may be continued by typing \ at the end of a line.

Sample lines are:
#                  Xc Yc Zc  R  d  thet phi Vis sec/mat/reg
1) pic p sec color 0. 0. 0. 20. 30. 90.   0. 101 102 202
2) pic p mat       5. 5. 5. 20. 20.  0. 180.   1   3  5  \
    title = This is perspective picture 10

>>Type in picture command, or helpcs or helppp
>>        q to quit
pic p mat 156 216 60 286 180 270 0 1 2 101 102 103 104 105 106

>>Type in picture command, or helpcs or helppp
>>        q to quit
```

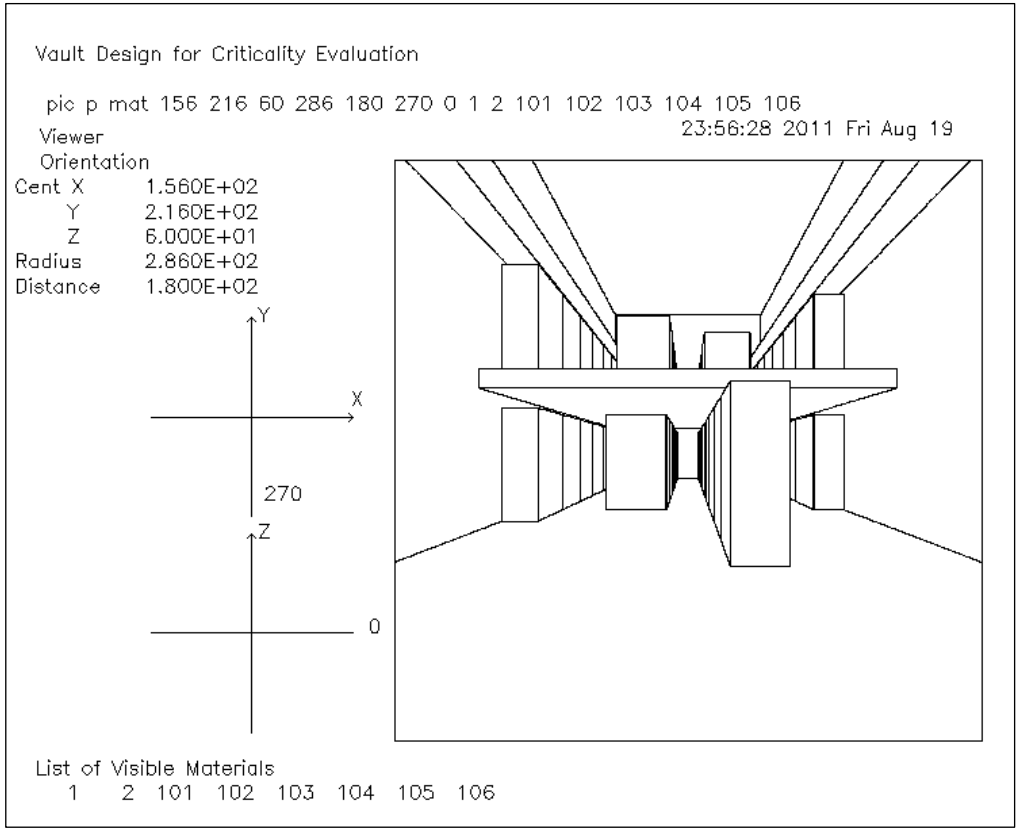

What's new?

- New continuous energy cross-section libraries
  - ENDL99
  - ENDL2008
  - ENDFB6R8
  - ENDFB7R0
  - IAEAPNUC
  - JEFF2.2
  - JEFF3.1
  - JEFF3.1.1
  - JENDL3.3
  - MCNP.50c, MCNP.51c, MCNP.55c, MCNP.66c, MCNP.70c

What's new?

- New unresolved resonance region probability table libraries
  - PT.ENDFB7R0.BNL
  - PT.JEFF3.1
  - PT.JEFF3.1.1
  - PT.MCNP.66c, PT.MCNP.70c

- New thermal scattering – S(α,β) – libraries
  - T.ENDFB7R0, T.ENDFB7R0.BNL, T.ENDFB7R0.LANL
  - T.JEFF3.0, T.JEFF3.1, T.JEFF3.1.1

What's new?

- **New user training workbook**
  - **CSG-TM-016**

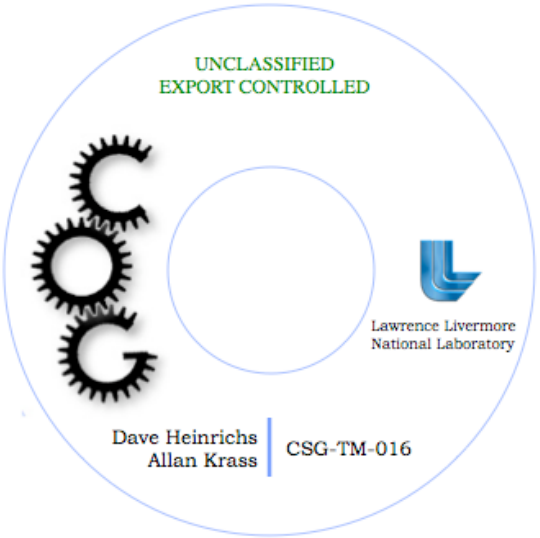

  - **Recent outreach activity**

CSG-TM-016

CSG-TM-016

Course Content

1 Installation and verification

1.1 Hardware review
1.2 Operating system review
1.3 The COG website – http://cog.llnl.gov
1.4 Obtaining the code from RSICC or the OECD NEA Databank
1.5 Installation – COG10 software installation README file
1.6 Running the verification test problems
1.7 Installation and verification documentation for SQA – CSAM06-102

2 Getting started

2.1 The COG manual – UCRL-TM-202590
2.2 Problem #1 – Jezebel – PU-MET-FAST-001 ———— Sample Problem

2.2.1 Review of COG input deck ———— Manual, p. 443
2.2.2 Review of COG data-blocks and keywords —— Manual, p. 16
2.2.3 Review of COG comment characters ———— Manual, p. 17

2.3 Running COG

2.3.1 Running interactively in the foreground ——— Manual, p. 10
2.3.2 Running in the background ———— Manual, p. 10
2.3.3 Batch processing on LLNL machines
2.3.4 Killing jobs ———— Manual, p. 10

2.4 Reviewing the sample problem output ———— Manual, p. 445

2.4.1 Review starting random numbers
2.4.2 Review K calculation results
2.4.3 Review fraction of fissions, absorptions, escapes
2.4.4 Review mean times
2.4.5 Review optical paths
2.4.6 Review summary tables
2.4.7 Review restart, timing and misc. memory information

2.5 Additional useful features

2.5.1 Add a volume calculation ———— Manual, p. 123
2.5.2 Assign colors and make a color picture ——— Manual, p. 112,148
2.5.3 Increase the volume calculation resolution —— Manual, p. 123
2.5.4 Discuss boundary conditions and defaults —— Manual, p. 99

3 Student exercises

3.1 Problem #2 – HEU-MET-FAST-001 ———— Fissile metal
3.2 Problem #3 – HEU-MET-FAST-058 ———— Non-fissile material
3.3 Problem #4 – U233-SOL-INTER-001 ———— Fissile solution
3.4 Problem #5 – LEU-COMP-THERM-033 ———— Fissile compound
3.5 Instructor completion of Mentor Sheet Qualification Criteria 1:
Modeling fissile and non-fissile materials

4 Introduction to UNITS

4.1 Review of the DEFINE UNIT specifications ———— Manual, p. 103
4.2 Review of the USE UNIT specifications ———— Manual, p. 105
4.3 Review of the FILL specification and default ———— Manual, p. 97
4.4 Problem #6 – HCT002-20 ———— Complex Unit
4.5 Instructor completion of Mentor Sheet Qualification Criteria 2:
Modeling single unit geometry

5 Finite and infinite and array geometries

5.1 Review BOUNDARY conditions ———— Manual, p. 99
5.2 Problem #7 – HEU-COMP-THERM-001-7 ———— Finite Array
5.3 Problem #7a ———— Interstitial moderator
5.4 Problem #7b ———— Interstitial material
5.5 Problem #8 – PU-COMP-INTER-001 ———— Infinite Medium
5.6 Problem #9 – HEU-COMP-INTER-005 ———— Infinite Array
5.7 Instructor completion of Mentor Sheet Qualification Criteria 3:
Modeling finite and infinite array geometries

6 Concluding material

6.1 Student feedback and completion of "Evaluation of Training" forms
6.2 Needs for advanced COG training?
6.3 Awarding of course completion certificates

What's next?

- **More physics**
  - **JENDL4.0** (complete)
  - **ENDFB7R1** (in progress)
  - **COGNRF** nuclear resonance fluorescence library (complete)
  - **RadSrc** for α-decay to a user defined time to generate the gamma source (useful for shielding applications) (complete)
  - **COGDFG** library of fission product decay to a user defined time or time interval to generate the delayed fission gamma source (useful for criticality accident alarm and dose calculations) (in progress)

What's next?

- **Enhanced visualization**
  - **WebGL** for 3-D visualization and manipulation

- **Enhanced verification and validation**
  - ENDF/B-VII.1 testing (2012)
  - More benchmarking to ICSBEP handbook (HEU in progress)
  - V&V reports and input files
  - http://cog.llnl.gov/validation.html

What's next?

- **Continued outreach**
  - CSG-TM-016 training available
  - Additional training needs?
  - Visit our website http://cog.llnl.gov
  - Contact us at cog@llnl.gov